Characteristic Curves

Different Rate Discharge Curve(25℃)

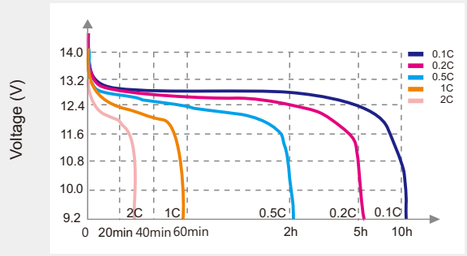

Discharge Time

Different Temperature Discharge Curve(0.5C)

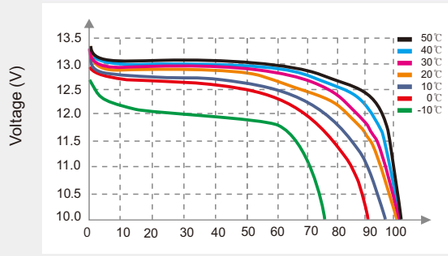

Capacity(%)

State of Charge Curve(0.5C, 25℃)

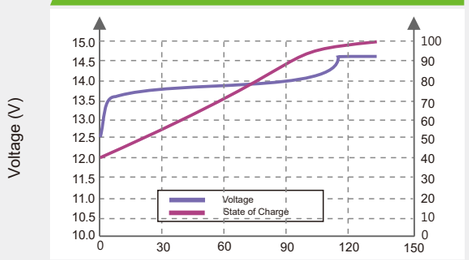

Charging Time (Minutes)

Different Temperature Self Discharge Curve

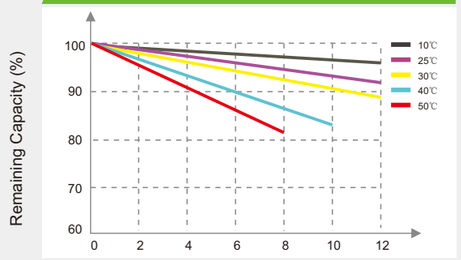

Storage Time(Months)

Different DOD Discharge Cycle Life Curve(1C)

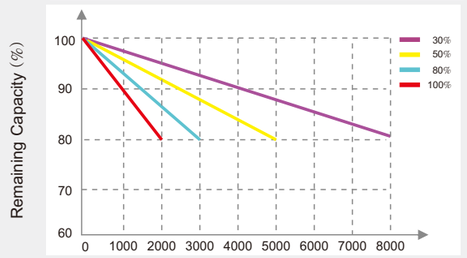

Number of Cycles

◆ China sales office
5th Floor, Xinbaohui Bldg.,Nanhai Blvd.,Nanshan,Shenzhen, China.
Tel:+ 86-755-86036060(100 lines)
E -mail: export@leoch.com

◆ Hong Kong sales office
Workshop C, 33/F, TML Tower,No. 3 Hoi Shing Road, Tsuen Wan,New Territories, Hong Kong
Tel:+852 3578 6666
E-mail: sales.hk@leoch.com

◆ Singapore sales office
NO. 1 Techpark Crescent Singapore 638131
Tel:+65 6863 6078
E-mail: sales.sg@leoch.com

◆ Australia sales office
2 /29 Tarlington Place, Smithfield. NSW 2164 Australia
Tel:+ 02 9756 0950
E-mail: sales.au@leoch.com

◆ North America sales office
19751 Descartes, Unit A, Foothill Ranch, CA 92610, USA
Tel: 949-588-5853
E-mail: sales@leoch.us

◆ UK sales office:
9B Wheatstone Court. Waterwells Business Park, Gloucester, GL2-2AQ, UK
Tel: +44(0) 1452 729428
E-mail: sales.Europe@leoch.com

◆ Europe/MEA sales office
1 Deligiorgi St., 121 31 Athens Greece
Tel: +30 210 5760318 (2 lines)
E-mail: support_EMEA@leoch.com

◆ India sales office
Shed no. A-53(b), 2nd Stage of Peenya Industrial Area,
Bangalore North Taluk, Bangalore-560058, Karnataka, India
Tel:+91-80-23440018/23440019
E-mail: indiasales@leoch.com

© 2017LEOCH.All rights reserved.
Trademarks and logos are the property of
LEOCH and its affiliates unless otherwise noted.
Subject to revisions without prior notice.

Publication No: LB-LFeLi-12-PB-EN-V1.1-201708

www.leoch.com

INTEGRATED
LiFePO$_4$ BATTERY
FOR MICRO-POWER SYSTEM

Leoch International Technology Limited

LEOCH®
LEOCH BATTERY

$LiFePO_4$ Battery Cell

Lithium iron Phosphate battery ($LiFePO_4$) has a nominal voltage of 48VDC. It is comprised by 16 cells of 3.2V each. The internal structure of $LiFePO_4$ battery cell is shown in the figure on the right. Shown is the olivine structure of $LiFePO_4$ as the positive electrode of cell. Aluminum foil functions as current collector of positive pole. A polymer membrane separates positive and negative electrodes of the cell. The electron (e-) can't pass through the polymer separator but Li+ can pass through it freely. The negative electrode which consists of graphite is shown in the figure on the right. Copper foil is the current collector of negative electrode. There is organic electrolyte in the cell which is sealed by Al-plastic composite film.

Schematic drawing

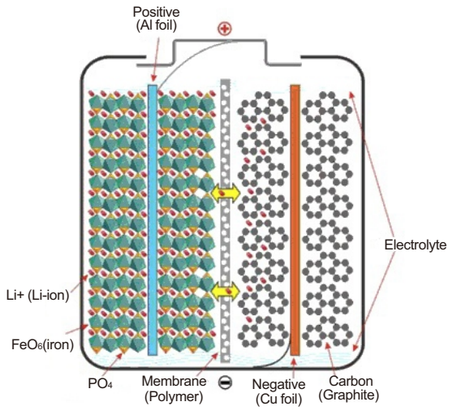

Advantages

- Environment-friendly , not containing heavy metals.
- Longer Cycle Life, Offers up to 20 times longer cycle life and five times longer float/calendar life than lead acid battery, helping to minimize replacement cost and reduce total cost of ownership.
- Lighter Weight, About **40%** of the weight of a comparable lead acid battery. A 'drop in' replacement for lead acid batteries.
- Low self-discharge rate (per month): **≤2%**, no memory effect.
- Higher Power, Delivers twice power of lead acid battery, even high discharge rate, while maintaining high energy capacity.
- Superior **Safety**, Lithium Iron Phosphate chemistry eliminates the risk of explosion or combustion due to high impact, overcharging or short circuit situation.
- Wide operating temperature range **(-20~+60℃)** and good high temperature performance.
- Excellent fast charging performance, after fast charging with 1C current, the capacity can reach **95%** of rate capacity in one hours.

Applications

- Electric vehicles, electric mobility
- Telecommunication
- Lighting
- Solar/wind energy storage system
- Medical equipment

Specifications

モデル番号クリックで、各モデルの性能表が表示されます。

Model	Nominal Voltage (V)	Rated Capacity (Ah)	Dimensions (mm/inches)				Weight (Kg)
			Length	Width	Height	Total Height	
LFeLi-1204M	12.8	4.5	89/3.50	69/2.72	101/3.98	107/4.41	1.2
LFeLi-1207M	12.8	7.5	151/5.94	65/2.56	93.5/3.68	99/3.90	1.7
LFeLi-1212M	12.8	12	151/5.94	98/3.86	95/3.74	101/3.98	2.2
LFeLi-1218M	12.8	18	181.5/7.15	77/3.03	167.5/6.59	167.5/6.59	2.7
LFeLi-1220M	12.8	20	181.5/7.15	77/3.03	167.5/6.59	167.5/6.59	3.0
LFeLi-1233M	12.8	33	166/6.54	175/6.89	125/4.92	125/4.92	4.8
LFeLi-1240M	12.8	40	197/7.76	165/6.50	170/6.69	170/6.69	5.9
LFeLi-1250M	12.8	50	197/7.76	165/6.50	170/6.69	170/6.69	7.5
LFeLi-1255M	12.8	55	229/9.02	138/5.43	205/8.07	211/8.31	8.1
LFeLi-1260M	12.8	60	260/10.24	168/6.61	208/8.19	214/8.43	8.8
LFeLi-1275M	12.8	75	260/10.24	168/6.61	208/8.19	214/8.43	11.6
LFeLi-12100M	12.8	100	342/13.46	173/6.81	212/8.35	220/8.66	13.6
LFeLi-12150M	12.8	150	483/19.02	170/6.69	224.5/8.84	238.5/9.39	21.3
LFeLi-12200M	12.8	200	522/20.55	240/9.45	218/8.58	224/8.82	29.6